IKO

Precision Linear Slide Unit

BWU

U.S. PATENTED

CAT-57105B

ISO 9001 Certified

ISO 14001 Certified

ALL STAINLESS

Wide variation for numerous applications
Best suited for clean room use

- Superior corrosion resistance and high temperature performance, because all parts are made of stainless steel
- High capacity against moment loads and complex loads
- Stable accuracy and rigidity Smooth and quiet movement

The smallest size
is newly available.

Table width Only 6mm!

BWU 6-10 *(Full size photo)*

IKO

Precision Linear Slide Unit

BWU

IKO Precision Linear Slide Unit
BWU

IKO Precision Linear Slide Unit is a simple and compact linear motion rolling guide for limited stroke length. The unit incorporates steel balls assembled in two rows between a solid table and bed, each ball making contact with the ground raceways of the table and bed at four points so that stable accuracy and high rigidity are obtained even under fluctuating and complex load.
IKO Precision Linear Slide Unit achieves highly accurate and smooth linear motion, since retainers are used to hold the steel balls and prevent them from contacting with each other.
The table, balls, retainers, bed, end stopper plates, etc. are made of stainless steel to give superior corrosion and heat resistance. Therefore, IKO Precision Linear Slide Unit is suitable for use in a clean room and also in medical equipment, IC manufacturing equipment, vacuum apparatus, etc.

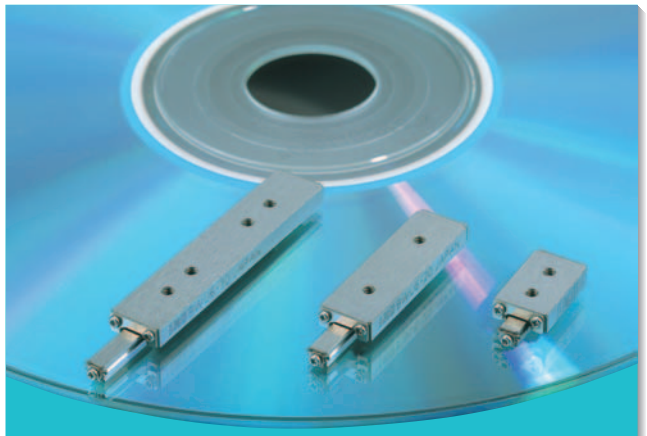

Wide range of size variations !

Smallest size, width 6mm and height 3.2mm is newly introduced.

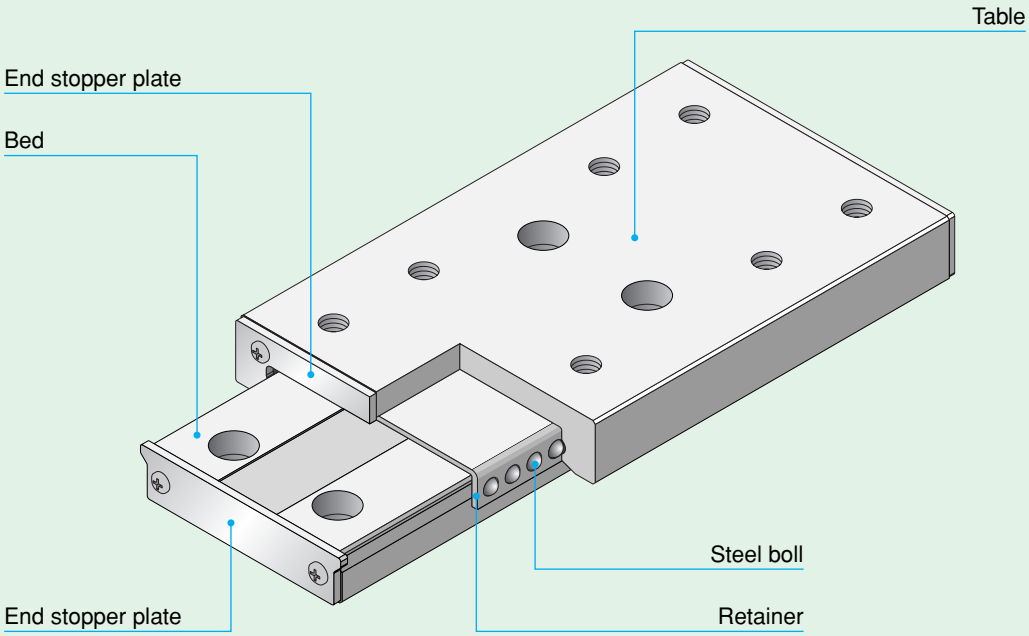

U.S. PATENT No. 5,213,419
No. 5,213,420

Structure of Precision Linear slide Unit

Identification Number

The identification number of IKO Precision Linear Slide Unit consists of a model code and a size as shown below.

Example of identification number

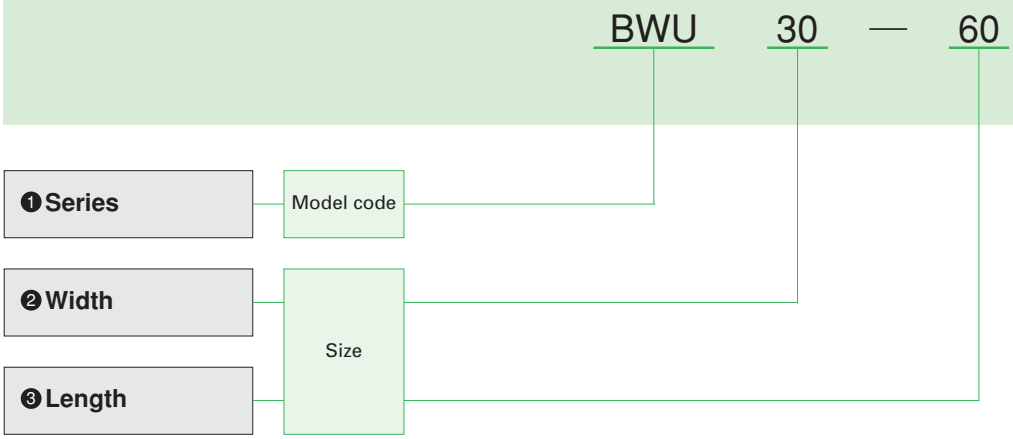

❶ Series	BWU
❷ Width ❸ Length	Width and Length are shown in Table 1.

Table 1 Width and Length

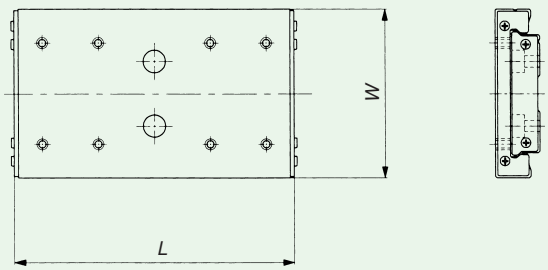

unit: mm

Model number / Item	BWU 6	BWU 8	BWU 12	BWU 17	BWU 25	BWU 30	BWU 40	BWU 60
Width *W*	6	8	12	17	25	30	40	60
Length *L*	10 20 30	10 20 30	20 30 45	20 30 45	30 45 60 75	30 45 60 75 90	40 60 80 100	60 80 100 120

1N=0.102kgf=0.2248lbs.
1mm=0.03937inch

Load Rating and Life

The load ratings of Precision Linear Slide Unit are the load ratings for downward load.

Basic dynamic load rating C

The basic dynamic load rating is defined as a constant load both in direction and magnitude under which a group of identical Precision Linear Slide Unit are individually operated and 90% of the units in the group can travel 50×10^3m free from material damage due to rolling contact faigue.

Basic static load rating C_0

The basic static load rating is defined as a static load that gives a prescribed constant contact stress at the center of the contact area between the rolling element and raceway receiving the maximum load. It is the static limit load that can be applied on a linear guide, and used generally in combination with the static safety factor.

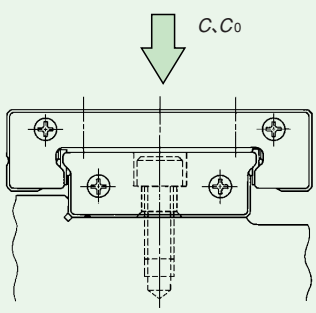

Fig. 1 Load direction for load ratings

Allowable load F

Allowable load is a load under which the sum of elastic deformations of the ball and raceway in the contact area subjected to the maximum contact stress is small enough to guarantee accuracy and smooth rolling movement.
Therefore, where very smooth and highly accurate linear motion is required, make sure to use a Precision Linear Slide Unit well below the allowable load values.

Static moment rating T_0

The moment rating is defined as a static moment load that gives a prescribed constant contact stress at the center of the contact area between the rolling element and raceway receiving the maximum load.(See Fig.2.)

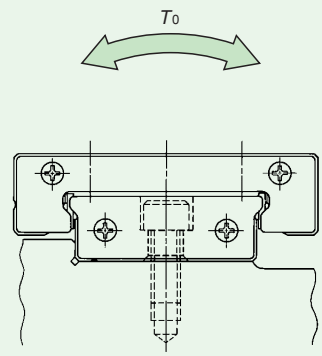

Fig. 2 Static moment rating

Load ratings by direction

The basic load ratings of Precision Linear Slide Unit change by loading direction. The basic dynamic and static load ratings shown in the dimension tables are downward load ratings. Load ratings for other loading directions can be obtained by multiplying the load directional factors as shown in Table 2.

Table 2 Load direction and load ratings

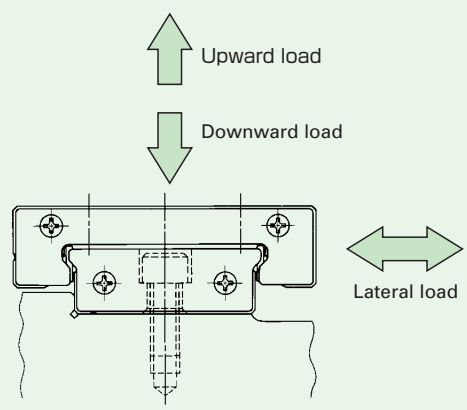

Load rating / Load direction	Basic dynamic load rating	Basic static load rating
Downward	C	C_0
Upward	C	C_0
Lateral	1.13 C	1.19 C_0

Life

The basic rating life of IKO Precision Linear Slide Unit is obtained from the formula.

$$L = 50\left(\frac{C}{P}\right)^3 \quad \cdots\cdots (1)$$

where, L : Rating life, 10^3m
C : Basic dynamic load rating, N
P : Equivalent load, N

Therefore, if the stroke and the number of strokes per minute are given, the life in hours can be obtained from the following formula.

$$L_h = \frac{10^6 L}{2Sn_1 \times 60} \quad \cdots\cdots (2)$$

where, L_h : Rating life in hours, h
S : Stroke length, mm
n_1 : Number of strokes per minute, cpm

Static safety factor

The static safety factor, fs of IKO Precision Linear Slide Unit can be obtained from the following formula, and general values of this factor are shown in Table 5.

$$f_s = \frac{C_0}{P_0} \quad \cdots\cdots (3)$$

where, f_s : Static safety factor
C_0 : Basic static load rating, N
P_0 : Static load, N

Table 3 Static safety factor

Operating conditions	f_s
Operation with vibration and/or shocks	3～5
Operation requiring high running performance	2～4
Normal operation	1～3

Load factor

Actual loads applied on the linear guide sometimes exceed the theoretically calculated load due to vibration and shocks caused by machine operation. The load for life calculation is generally determined by multiplying the load factor shown in Table 4 to the theoretically calculated load.

Table 4 Load factor

Operating conditions	f_w
Smooth operation free from shocks	1 ～1.2
Normal operation	1.2～1.5
Operation with shocks	1.5～3

Accuracy

Accuracy of IKO Precision Linear Slide Unit is shown in Table 5 and 6.
When special accuracy is required, please contact IKO.

Table 5 Accuracy

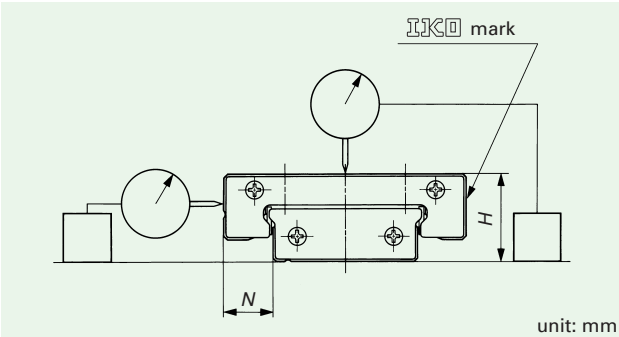

unit: mm

Item	Deviation and variation
Dim. H tolerance	±0.040
Dim. N tolerance	±0.050
Parallelism at table center	See Table 6.
Parallelism at table side	See Table 6.

Table 6 Running accuracy

unit: mm

Nominal length of unit Lmm Over	Incl.	Parallelism at table center(1)	Parallelism at table side(2)
—	50	4	6
50	80	5	8
80	120	6	9

Note(1): The value of parallelism at table center shown a maximum variation of unit height measured at the table center when the table is stroked.
(2): The value of parallelism at table side shows a maximum variation measured at table side (opposite side of IKO mark) when the table is stroked.

1N=0.102kgf=0.2248lbs.
1mm=0.03937inch

Preload

Preload of IKO Precision Linear Slide Unit is adjusted to a proper amount at IKO factory.

Precautions for Use

❶ IKO Precision Linear Slide Unit is coated with rust preventive oil. Wash it with clean liquid before assembling and lubricate it with good quality oil or grease.

❷ IKO Precision Linear Slide Unit does not have a mechanical stopper. When over stroke is expected during the operation, prepare a stopper system on the adjoining equipment.

❸ When high running accuracy is needed, the load should be applied at around the center of the table(or bed), and avoid stroking the table in full length.

❹ Sometimes, retainers may shift from the normal position due to unbalanced loading and/or irregular and high speed operation. To remedy for such phenomena, move IKO Precision Linear Slide Unit in full stroke during operation at some intervals prescribed either in time or number of strokes.

❺ IKO Precision Linear Slide Unit can be used at high temperatures, because it does not have resin parts. However, if the operating temperature is over 100°C , please consult IKO.

❻ IKO Precision Linear Slide Unit can be operated at speeds lower than 30 meters per minute.

❼ The tightening depth of screws on the table should be less than the values shown in the dimension table. If the tightening depth is larger than these values, the screw will push the bed/retainer as the table is a through hole, and the running accuracy and life will deteriorate.

Mounting

❶ Reference mounting surface
The reference mounting surface is the side surface opposite to the IKO mark . (See Fig.3.)

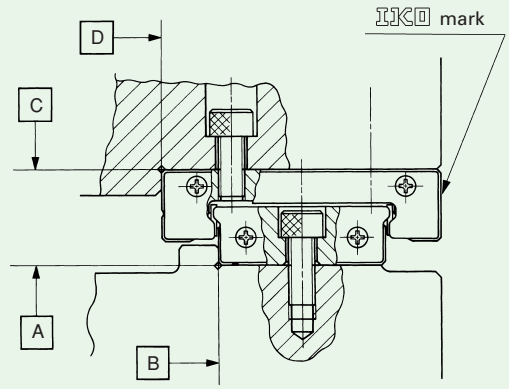

BWU12～BWU60

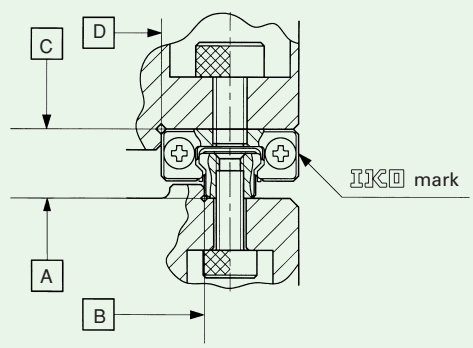

BWU6, BWU8

Fig. 3 Reference mounting surface and mounting example

❷ General mounting procedure (Example)

As shown in Fig.3 the reference mounting surfaces B and D and the mounting surfaces A and C are precisely finished by grinding. Stable linear motion with high accuracy will be obtained by correctly the unit on the reference mounting surfaces and the mounting surfaces of the machine which will be precisely finished.

It is recommended to mark a relieved filet at the corners of the mating reference mounting surfaces as shown in the figure in Table 7. Recommended shoulder height of the mating reference mounting surfaces is given in Table 7.

Table 7 Shoulder height of the mating reference mounting surfaces

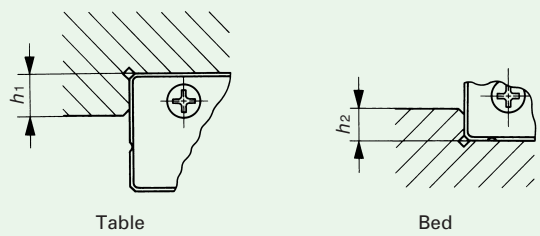

unit: mm

Model number	h_1	h_2
BWU 6	1	0.5
BWU 8	1.2	0.8
BWU 12	1.5	0.8
BWU 17	2.5	1.2
BWU 25	2.5	1.5
BWU 30	3	2
BWU 40	3	2.5
BWU 60	4	2.5

❸ Where lateral load predominant

As shown in Fig.4 fix the side surface of the table and the side surface of the bed securely onto the machine with a presser plate, etc.

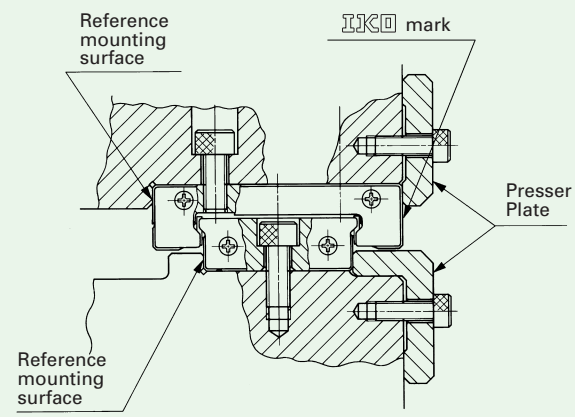

Fig. 4 Example of mounting when lateral load is predominant

❹ Mounting bolt tightening torque

Table 8 shows the mounting bolt tightening torque in general application when hexagon socket head stainless steel bolts (equivalent to JIS division A2-70) are used. According to the material of mating parts and the operating conditions, increase or decrease the amount of tightening torque.

Table 8 Mounting bolt tightening torque

Bolt size	Tightening torque N·m
M1 ×0.25	0.04
M1.6 ×0.35	0.15
M2 ×0.4	0.31
M3 ×0.5	1.1
M4 ×0.7	2.5

1N=0.102kgf=0.2248lbs.
1mm=0.03937inch

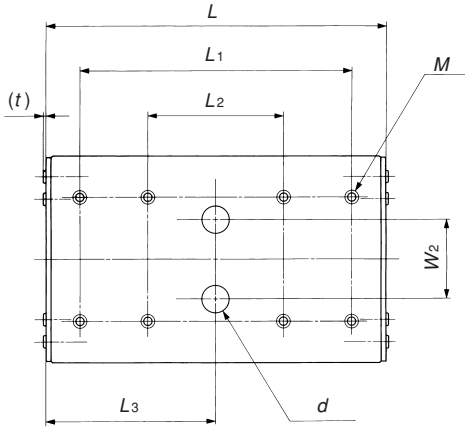

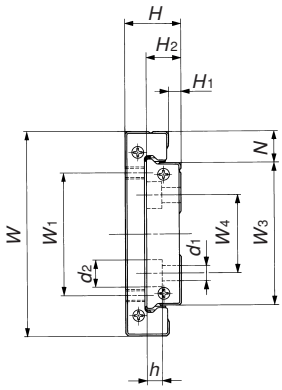

Model number	Mass (Ref.) g		Dimensions of assembly mm						Dimensions of table mm					
	Table	Bed	W	H	H_1	N	L	Max. stroke length	W_1	L_1	L_2	M	Max. tightening depth	W_2
BWU 6- 10	0.72	0.23					10	3	—	4	—			—
BWU 6- 20	1.6	0.50	6	3.2	0.7	2	20	11	—	10	—	M1.4	0.8	—
BWU 6- 30	2.4	0.78					30	16	—	18	10			—
BWU 8- 10	0.96	0.42					10	4	—	5.5	—			—
BWU 8- 20	2.2	0.97	8	4	1	2.5	20	16	—	10	—	M2	0.8	—
BWU 8- 30	3.3	1.5					30	20	—	21	10			—
BWU 12- 20 (1)	3.6	1.9					20	16	—	8	—			—
BWU 12- 30 (1)	5.7	3.2	12	4.5	1	3	30	20	—	15	—	M2	1.1	—
BWU 12- 45 (1)	8.5	4.9					45	30	—	31	15			—
BWU 17- 20	9.2	3.9					20	14		10	—			—
BWU 17- 30	17.8	7.8	17	8	1.5	5	30	19	12	20	—	M2	3	—
BWU 17- 45	26.5	11.7					45	29		30	—			—
BWU 25- 30	22.5	13.3					30	23		15	—			—
BWU 25- 45	41.6	24.3	25	9	1.8	5.5	45	28	10	25	—	M3	2.5	—
BWU 25- 60	55.7	33.0					60	38		25	—			—
BWU 25- 75	68.4	40.8					75	48		55	25			—
BWU 30- 30	31.9	25.0					30	23		15	—			—
BWU 30- 45	56.9	45.4					45	29		25	—			—
BWU 30- 60	76.1	61.5	30	12	3.4	6	60	35	14	25	—	M3	3	—
BWU 30- 75	93.8	76.1					75	47		55	25			—
BWU 30- 90	101	84.8					90	59		55	25			—
BWU 40- 40	68.9	52.0					40	31		20	—			—
BWU 40- 60	125	93.0	40	14	3.5	8	60	39	20	40	—	M4	4	—
BWU 40- 80	167	125					80	47		40	—			—
BWU 40-100	207	155					100	63		80	40			—
BWU 60- 60	195	194					60	34		40	—			—
BWU 60- 80	261	261	60	16	3.6	9	80	45	36	40	—	M4	4	—
BWU 60-100	321	325					100	56		80	40			23
BWU 60-120	386	391					120	68		100	40			23

Note(1): Special mounting bolts for mounting the bed(cross recessed head cap screws M2 × 4)are appended to BWU12.

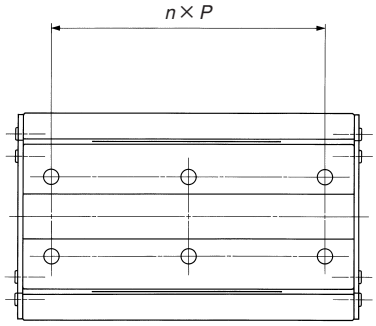

Dimensions of bed mm											Basic dynamic load rating	Basic static load rating	Allowable load	Static moment rating	Model number
L_3	d	t	W_3	H_2	W_4	n	P	d_1	d_2	h	C N	C_0 N	F N	T_0 N·m	
—	—				—	1	4	M1.0 (Thru. hole)	—	—	120	157	52	0.18	**BWU 6- 10**
—	—	0.46	2	1.9	—	1	8		—	—	195	313	104	0.36	**BWU 6- 20**
—	—				—	2	8		—	—	274	509	170	0.59	**BWU 6- 30**
—	—				—	1	5	M1.6 (Thru. hole)	—	—	158	183	61	0.31	**BWU 8- 10**
—	—	0.45	3	2.6	—	1	10		—	—	226	306	102	0.52	**BWU 8- 20**
—	—				—	2	10		—	—	341	550	183	0.94	**BWU 8- 30**
—	—				—	1	7.5				226	306	102	0.98	**BWU 12- 20** (1)
—	—	0.45	6	2.8	—	1	15	2.4	4	1.5	341	550	183	1.8	**BWU 12- 30** (1)
22.5	4.5				—	2	15				464	856	285	2.7	**BWU 12- 45** (1)
10	4.5				—	1	7.5				457	550	183	2.2	**BWU 17- 20**
—	—	0.8	7	5	—	1	15	2.4	4.2	2.3	675	963	321	3.8	**BWU 17- 30**
22.5	4.5				—	2	15				927	1 510	504	6.0	**BWU 17- 45**
—	—				—	1	15				606	825	275	6.1	**BWU 25- 30**
—	—	0.9	14	5.2	—	1	30	3.5	6	3.2	927	1 510	504	11.3	**BWU 25- 45**
—	—				—	1	30				1 150	2 060	688	15.4	**BWU 25- 60**
37.5	6.5				—	2	30				1 360	2 610	871	19.5	**BWU 25- 75**
—	—				—	1	15				982	1 220	408	11.6	**BWU 30- 30**
—	—				—	1	30				1 480	2 200	734	20.9	**BWU 30- 45**
—	—	1.0	18	7.5	—	1	30	3.5	6.5	4.5	1 920	3 180	1 060	30.2	**BWU 30- 60**
37.5	6.5				—	2	30				2 220	3 910	1 300	37.2	**BWU 30- 75**
45	6.5				—	2	30				2 500	4 650	1 550	44.1	**BWU 30- 90**
—	—				—	1	20				1 580	1 910	637	24.1	**BWU 40- 40**
—	—	1.0	24	8.5	—	1	40	4.5	8	4.5	2 390	3 440	1 150	43.3	**BWU 40- 60**
—	—				—	1	40				3 090	4 970	1 660	62.6	**BWU 40- 80**
50	8				—	2	40				3 580	6 110	2 040	77.0	**BWU 40-100**
—	—					1					3 660	4 930	1 640	107	**BWU 60- 60**
—	—	1.1	42	10	23	1	40	4.5	8	4.5	4 580	6 780	2 260	148	**BWU 60- 80**
50	8					2					5 420	8 630	2 880	188	**BWU 60-100**
60	8					2					6 210	10 500	3 490	228	**BWU 60-120**

1N=0.102kgf=0.2248lbs.
1mm=0.03937inch

BWU

See you again at
Planet IKO
http://www.ikont.co.jp/eg/

NIPPON THOMPSON CO., LTD.

Head office :19-19 Takanawa 2-chome
Minato-ku, Tokyo 108-8586, Japan
Phone :Tokyo(03)3448-5850
Fax :(03)3447-7637
E-mail :ntt@ikonet.co.jp
URL :http://www.ikont.co.jp/eg/
Plant :Gifu, Kamakura

Nippon Thompson Co., Ltd.

● ASEAN REPRESENTATIVE OFFICE
586 Luang Road, Pomprab
Pomprab Satrupai, Bangkok
Thailand 10100
Phone: 66-26233699
Fax: 66-262330716
E-mail: iko@anet.net.th

IKO International, Inc.

● 91 Walsh Drive
Parsippany, NJ 07054
U.S.A.
Phone:(973)402-0254
Toll Free:1-800-922-0337
Fax:(973)402-0441
E-mail:eco@ikonet.co.jp

● 500 East Thorndale Avenue
Wood Dale, IL 60191
U.S.A.
Phone:(630)766-6464
Toll Free:1-800-323-6694
Fax:(630)766-6869
E-mail:mwo@ikonet.co.jp

● 20170 South Western Avenue
Torrance, CA 90501
U.S.A.
Phone:(310)609-3988
Toll Free:1-800-252-3665
Fax:(310)609-3916
E-mail:wco@ikonet.co.jp

● 2150 Boggs Road, Suite 100
Duluth, GA 30096
U.S.A.
Phone:(770)418-1904
Toll Free:1-800-874-6445
Fax:(770)418-9403
E-mail:seo@ikonet.co.jp

● 8105 N. Beltline Road
Suite 130, Irving, TX 75063
U.S.A.
Phone:(972)929-1515
Toll Free:1-800-295-7886
Fax:(972)915-0060
E-mail:swo@ikonet.co.jp

Nippon Thompson Europe B.V.

● Sheffieldstraat 35-39
3047 AN Rotterdam
The Netherlands
Phone:010-4626868
Fax:010-4626099
E-mail:nte@ikonet.co.jp

● Mündelheimer Weg 56
40472 Düsseldorf
Germany
Phone:0211-414061
Fax:0211-427693
E-mail:ntd@ikonet.co.jp

Donaustaufer Str. 200
93059 Regensburg
Germany
Phone:0941-447737
Fax:0941-447747

● 2 Vincent Avenue, Crownhill
Milton Keynes Bucks MK8 0AB
United Kingdom
Phone:01908-566144
Fax:01908-565458
E-mail:sales@iko.co.uk

● Autovia Madrid-Barcelona, Km. 43,700
Polig. Ind. AIDA, A-8, Ofic. 2, 1ª
19200-Azuqueca de Henares
Guadalajara, Spain
Phone:949-263390
Fax:949-263113
E-mail:nts@ikonet.co.jp

● Roissypole Le Dôme
2 rue de La Haye
BP 10950 Tremblay en France
95733 Roissy C. D. G. Cedex
France
Phone:01-48165739
Fax:01-48165746
E-mail:ntf@ikonet.co.jp

Printed in Japan © 2003.09(SAS)